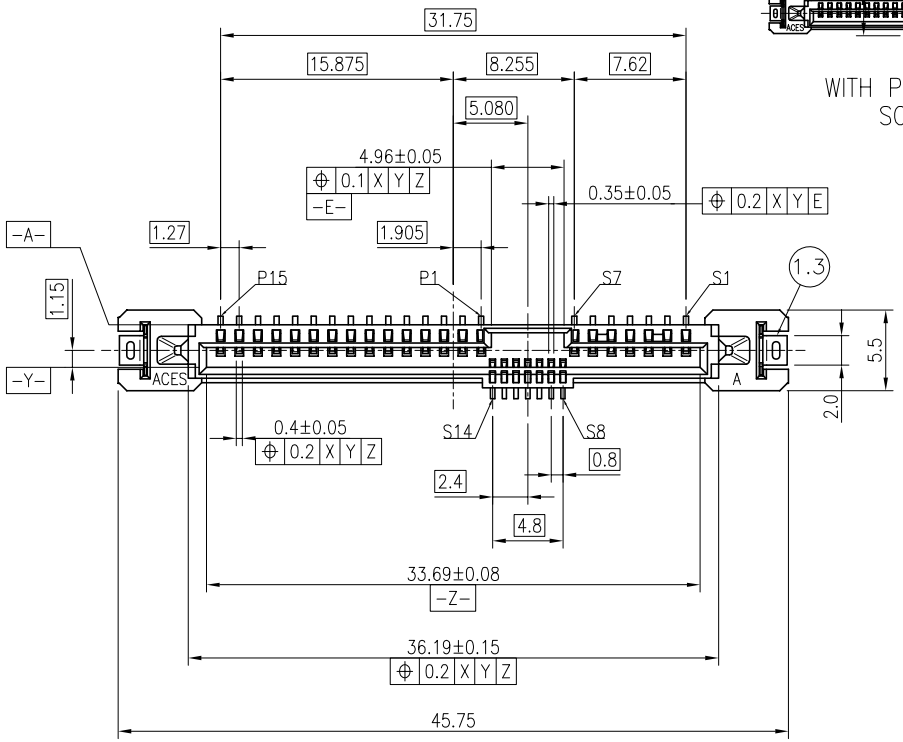

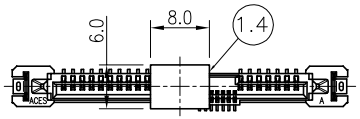

WITH PICK-UP CAP
SCALE 1:1

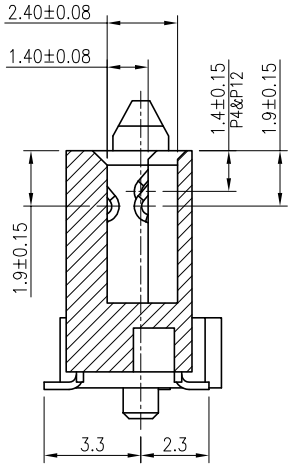

SECTION C-C
SCALE 4:1

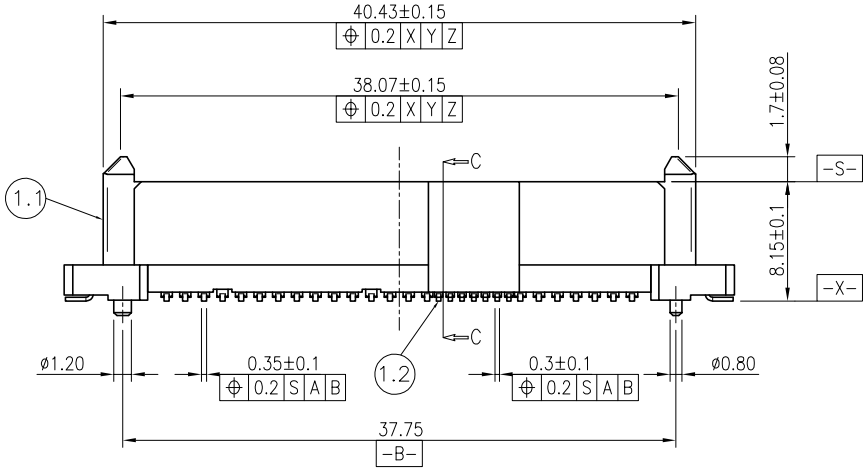

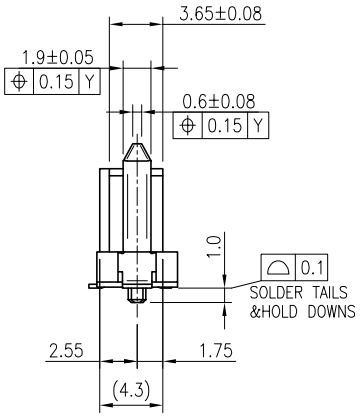

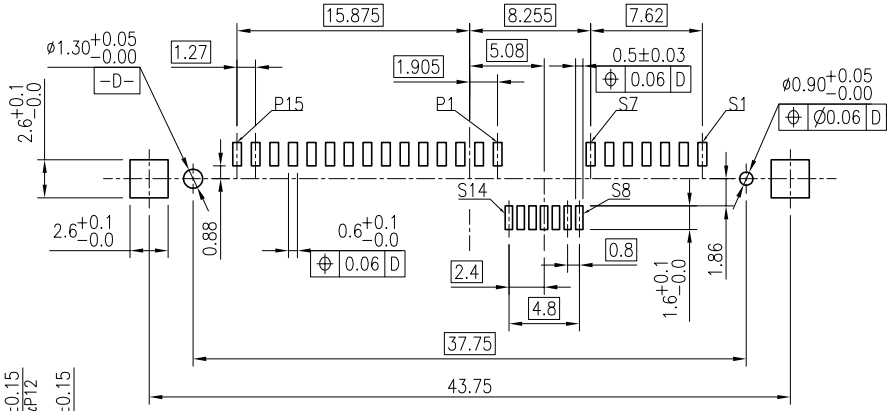

RECOMMENDED P.C.B. LAYOUT

NOTES:
1. MATERIAL:
   1.1 HOUSING: THERMOPLASTIC, HIGH TEMP.,UL94V-0; COLOR:BLACK.
   1.2 CONTACT: COPPER ALLOY
   1.3 HOLD DOWN: COPPER ALLOY
   1.4 PICK-UP CAP: THERMOPLASTIC, HIGH TEMP.,UL94V-0; COLOR:BLACK.
2. FINISH:
   2.1 CONTACT:
      GOLD PLATING ON CONTACT AREA.
      100~200u" MATTE TIN PLATING ON SOLDER TAILS.
      50~100u" NICKEL UNDERPLATING OVERALL.
   2.2 HOLD DOWN:
      100~200u" MATTE TIN PLATING ON SOLDER TAILS.
      50~100u" NICKEL UNDERPLATNG OVERALL.
3. REFLOW SOLDER CAPABLE TO 260°C ,PER ACES SPEC.
4. SPEC. PLS. REFER TO PS-51891-XXXXX-XXX
5. PACKAGE PLS. REFER TO 51891-XXXXX-XX-TRP
6. PART NUMBER
   51891-029 X X-XXX
   - NO OF CKT: XXX.CKT
   - PACKING: 0:TAPE&REEL
   - PLATING: D: 30u" GOLD PLATING
   - TYPE: 001:NONE

一般公差 TOLERANCES X. ±0.5 .XX ±0.15 .X ±0.25 .XXX ±0.1 ANGLES ±2°	宏致電子股份有限公司 Aces Electronics Co.,Ltd.		
檢驗尺寸標示 SYMBOLS Ⓒ Ⓜ INDICATE CLASSIFICATION DIMENSION Ⓒ MARK IS CRITICAL DIM. Ⓜ MARK IS MAJOR DIM.	品名 (TITLE) 1.27/0.8 PITCH SAS 12G RECEPTACLE VERTICAL SMT TYPE 圖號 (DWG NO.) 51891-029XX-XXX	製圖 (DR) 15'/04/08 IH. LEE 審核 (CHKD) ALEX 核准 (APPD) SEAN	
表面處理 (FINISH)	比例 (SCALE) 2:1 / 單位 (UNITS) mm	張數 (SHEET) 1 OF 1	SIZE A4 / REV 0